Compliments from
Jim White
S&W Supply Company
5308 Timberline Trail - Rapid City SD 57702
Website: http://www.swsupply.com - E-mail: whiz@swsupply.com
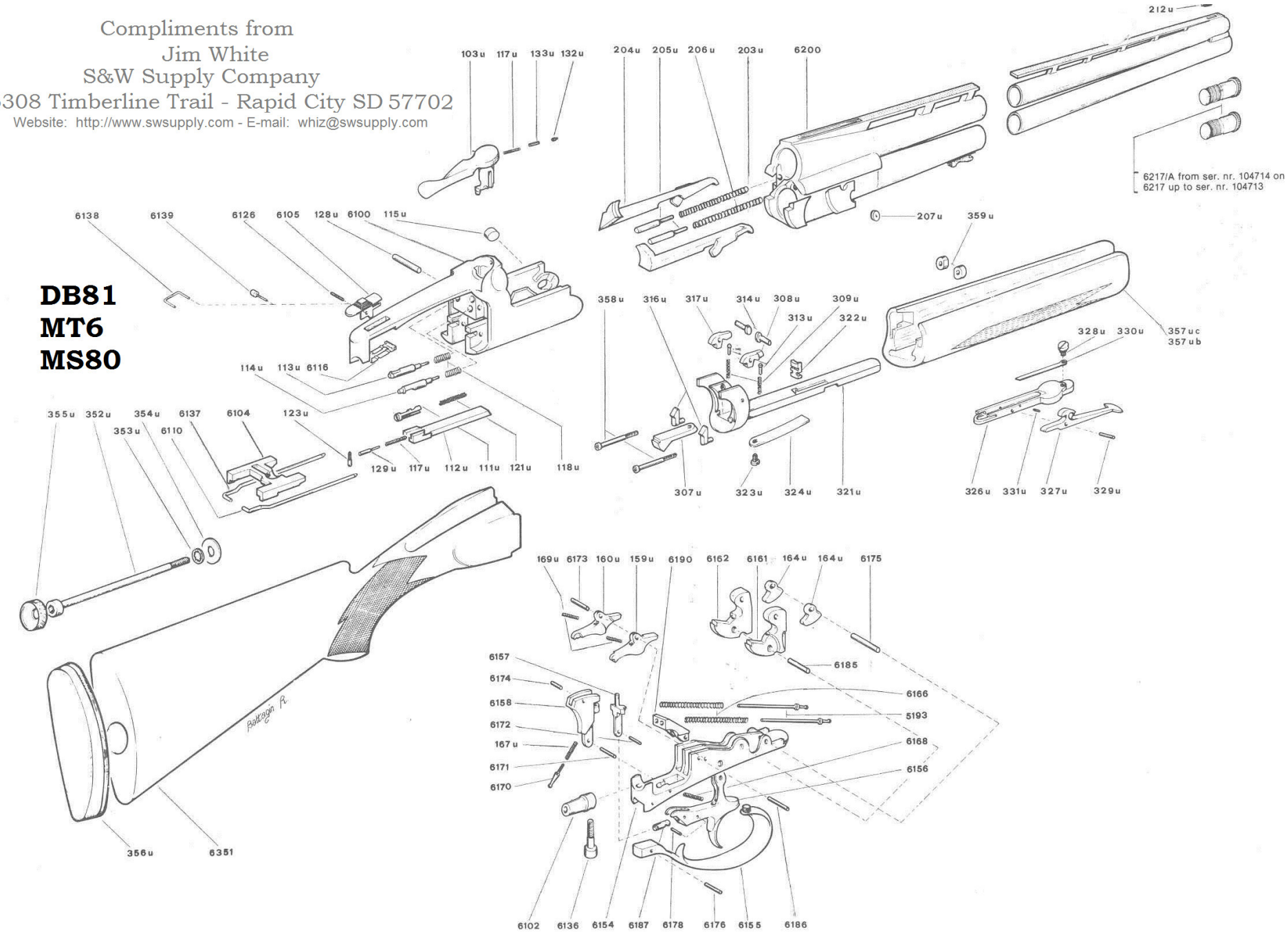
DB81
MT6
MS80